National Exams December 2014

07-Elec-B5, Advanced Electronics

3 hours duration

Notes:

1. If any doubt exists as to the interpretation of any question, the candidate is urged to submit, within their answer, a clear statement of any assumptions made.
2. This is a **CLOSED BOOK EXAM**.
   Any non-communicating calculator is permitted.
3. Answer all **FIVE** (5) questions.
4. All questions are worth 20 marks each.
5. Please start each question on a new page and clearly identify the question number and part number, e.g. Q4(a).
6. In schematics, ground and chassis may be assumed to be common, unless specifically stated otherwise.
7. Unless otherwise specified, assume that Op-Amps are ideal and that supply voltages are ±15V.
8. If questions require an answer in essay format, clarity and organization of the answer are important. Provide block diagrams and circuit schematics whenever necessary.

QUESTION (1)

This series voltage regulator has the following components values and device characteristics:

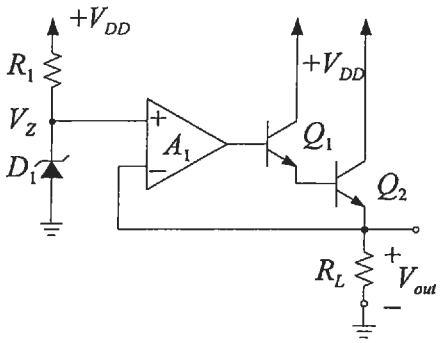

Op amp, A_1 is ideal
for Q_1 and Q_2:
$\beta = 100$, $V_{BE} = 0.7$ V, and $V_A = 100$ V
for D_1:
$V_Z = 6.7$ V at $I_Z = 1$ mA, $R_Z = 10\ \Omega$
$R_1 = 3.3$ kΩ
$R_L = 4\ \Omega$
$V_T = 25$ mV

a) Given $V_{DD} = 10$V, what is the nominal output voltage, V_{OUT}? (4 points)
b) If V_{DD} has a 1V p-p ripple, what will be the ripple voltage at the output? (8 points)
c) Find the power efficiency, η of this voltage regulator. (8 points)

QUESTION (2)

In the following tuned amplifier circuit, $V_{DD} = 10$ V, $I_{bias} = 2$ mA. The transistor parameters are given as $K = 1$ mA/V^2, $V_{TH} = 1$ V, $C_{gs} = 10$ pF, $C_{gd} = 1$ pF, and $\lambda = 0$.

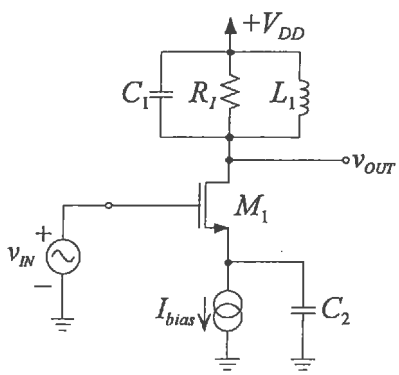

For: $L_1 = 1$ μH
$C_1 = 200$ pF, $C_2 = \infty$
$R_1 = 2$ kΩ

a) What is the center frequency, ω_o of this amplifier? (4 points)
b) What is the gain v_{OUT}/v_S at $\omega = \omega_o$? (8 points)
c) What is the 3dB bandwidth of this tuned amplifier? (8 points)

Useful formulae: for n-channel MOSFET

$$i_{DS} = K\left[(v_{GS} - V_{TH})v_{DS} - \frac{1}{2}v_{DS}^2\right] \quad \text{triode region}$$

$$i_{DS} = \frac{1}{2}K(v_{GS} - V_{TH})^2(1 + \lambda v_{DS}) \quad \text{saturation region}$$

QUESTION (3)

The following common source amplifier is already biased properly.

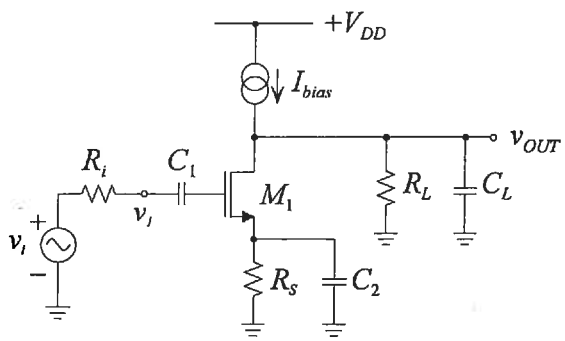

Given:

$g_m = 2$ mA/V	$r_o = 20$ kΩ
$R_i = 20$ kΩ	$R_L = 20$ kΩ
$R_S = 100$ Ω	
$C_{gs} = 20$ fF	$C_{gd} = 5$ fF
$C_L = 5$ fF	$C_1 = \infty$
$C_2 = \infty$	

d) Find the mid-band voltage gain v_{OUT}/v_i. (6 points)

e) What is the new mid-band voltage gain, v_{OUT}/v_i if capacitor C_2 is removed? (6 points)

f) What is the new 3dB frequency f_H if capacitor C_2 is removed? (8 points)

QUESTION (4) (Razavi, Example 9.9, pg. 405)

The bipolar circuit is biased with a current of I_1 = 1mA. Determine the voltage gain v_{OUT}/v_{IN}. (20 points)

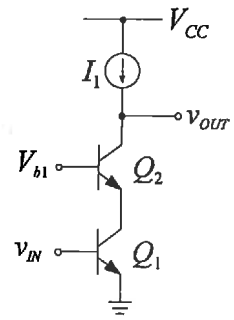

Given:

$\beta = 100$
$V_A = 5$ V

QUESTION (5)

In the following amplifier can be considered as a feedback circuit. You can assume that the transistor is operating in saturation mode.

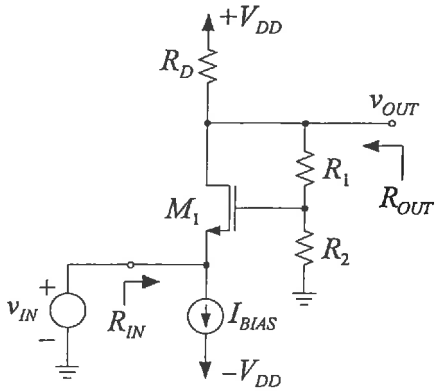

a) Determine the input and output resistance (R_{IN} and R_{OUT}) if there is no feedback network (i.e. $R_1 = \infty$, and $R_2 = 0$ Ω). (8 points)

b) Derive the input and output resistance (R_{IN} and R_{OUT}) if the feedback network has finite values for R_1 and R_2. (12 points)

Express you answer in terms of g_m, R_D, R_1 and R_2.